SM06AR

HF Motion Detector

微波感应器

Features:

- 1-10V output control
- High frequency motion detection to achieve on/off control
- Microwave operating frequency 5.8GHz, Extremely low transmission power <0.2mW
- 360˚ detection area , wide detection distances max.14m
- Daylight threshold,detection range and delay time can be setting
- Detection range, Hold time, Standby time, and Daylight threshold can be preset by Dip switch or remote control unit
- IP rating 65

– 1–10V 输出控制
– 微波感应控制开关
– 微波工作频率5.8GHz，传输功率<0.2mW
– 360° 检测范围，14米最大检测距离
– 动作亮度，检测范围和保持时间可以设置
– 检测范围、控制时间、待机时间和日光阈值可以通过拨码开关或遥控装置来设定
– IP65

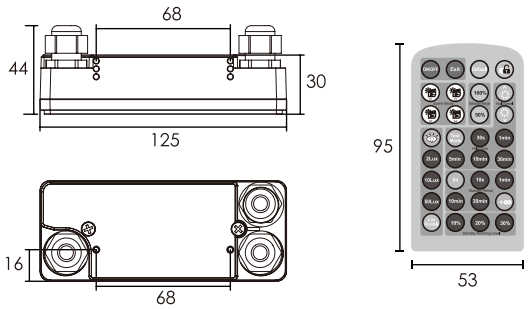

Parameters:

Rated supply voltage 额定电压	220-240V~
Frequency 额定频率	50/60Hz
Load wattage 负载功率	Max. 500W
Standby power 待机功率	Max. 0.6mW
Microwave frequency 微波频率	5.8GHz
Transmission power 微波功率	Max. 0.2mW
Detection distance DxH 探测距离	14x14m
Detection sensitivity 范围调节	50%~100%
Hold time 保持时间	5s~30min
Standby time 延时时间	0s~30min+∞
Standby dimming level 延时亮度	10%~50%
Daylight threshold 光敏感应	2lux/10lux/50lux/Disable
Dimensions LxWxH 尺寸	125x51x44mm
Fixing centre 安装孔距离	68mm
IP rating IP等级	IP65
Electrical connection 电器连接	0.75mm²~2.5mm²
Wire diameter 线径	Ø7mm, Ø9mm
IR remote control battery 遥控器锂电池	CR2025x1
IR remote control supply voltage 遥控器额定电压	DC 3V
IR remote control key life 遥控器按键寿命	≥400,000
IR remote control dimensions LxWxH 尺寸	95x53x8mm

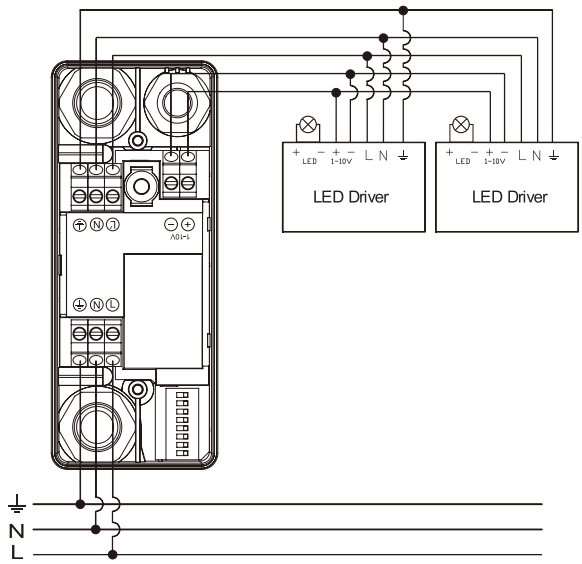

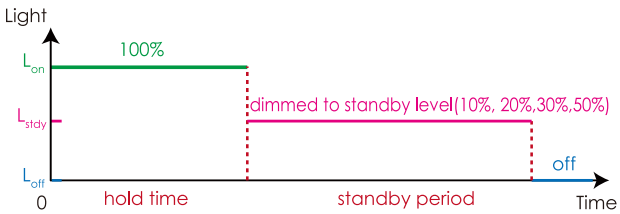

Tri-level Dimming Control

CE IP65