U Series

TRIAC Dimming LED Driver

可控硅调光LED驱动器

Features:

- Dimmable with leading edge or trailing edge dimmer
- Constant current driver
- Independent compact design
- Captured terminal screws
- Protections: opencircuit, shortcircuit, overload, overtemperature
- SELV output
- Protection class Ⅱ
- Smooth dimming compatible with most dimmer
- Dimming range 1...100%

– 适用普通可控硅前切相或后切相调光器
– 恒流驱动
– 超小体积，独立式紧凑型设计
– 螺丝锁紧大接线端子，方便多规格线接驳
– 输出开路, 短路, 过载和超温保护
– 符合安全特低电压标准
– 保护等级 II
– 平滑高性能调光, 匹配更多的调光器
– 调光范围 1...100%光通量

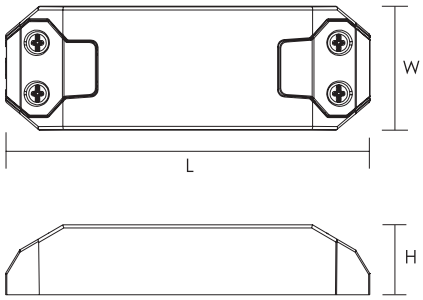

Parameters:

Model No. 型号	Input voltage 额定电压 (V)	Max. output 功率 (W)	Output current 输出电流 (mA)	Output voltage 输出电压 (V)	Power factor 功率因数 (λ)	Efficiency full load 效率 (%)	Ambient temperature 环境温度 t_a (°C)	Max. casing temperature 最大外壳温度 t_c (°C)	Isolation 隔离	Dimensions LxWxH 尺寸 (mm)	Weight 重量 (g)
D18009U	220-240	9	180	25-50	0.95	79	-20...+50	80	SELV	115x39x22	80
D26009U	220-240	9	260	15-35	0.95	78	-20...+50	80	SELV	115x39x22	80
D30009U	220-240	9	300	12-30	0.95	78	-20...+50	80	SELV	115x39x22	80
D35009U	220-240	9	350	11-26	0.95	78	-20...+50	80	SELV	115x39x22	80
D50009U	220-240	9	500	8-18	0.95	78	-20...+50	80	SELV	115x39x22	80
D60009U	220-240	9	600	7-15	0.95	77	-20...+50	80	SELV	115x39x22	80
D70009U	220-240	9	700	6-13	0.95	76	-20...+50	80	SELV	115x39x22	80
D26012U	220-240	12	260	24-46	0.95	80	-20...+45	90	SELV	115x39x22	80
D30012U	220-240	12	300	21-40	0.95	80	-20...+45	90	SELV	115x39x22	80
D35012U	220-240	12	350	18-35	0.95	80	-20...+45	90	SELV	115x39x22	80
D50012U	220-240	12	500	12-24	0.95	79	-20...+45	90	SELV	115x39x22	80
D60012U	220-240	12	600	10-20	0.95	78	-20...+45	90	SELV	115x39x22	80
D70012U	220-240	12	700	9-18	0.95	77	-20...+45	90	SELV	115x39x22	80